MOVING YOU FURTHER

HX180 L

With Tier 4 final / Stage IV Engine installed

*Photo may include optional equipment.

Net Power	Gross Power	Travel Speed	Operating Weight
SAE J1349 / 96 kW (128 HP) at 2,050 rpm	SAE J1995 / 102.1 kW (137 HP) at 2,050 rpm	5.3 km/hr (3.3 mph) / 3.2 km/hr (2.0 mph)	18,800 kg / 41,450 lb

HYUNDAI

RULE THE GROUND

The HX Series excavators are products of HHI's spirit of initiative, creativity and strong drive. HHI's engineers, who are the best in the industry, have worked tirelessly to offer a zero-defect product. The new HX Series reflects customers' needs in the field gleaned by thorough monitoring. They maximize fuel efficiency and performance proven by rigorous field tests and quality control.

*Photo may include optional equipment.

RULE THE GROUND

The HX series exceeds customers' expectation!
Become a true leader on the ground with HHI's HX series.

WORK MAX, WORTH MAX

- ECO Gauge
- IPC (Intelligent Power Control)
- New Variable Power Control
- Electronic Viscous Fan Clutch
- Attachment Flow Control (Option)
- New Cooling System with Increased Air Flow
- Enlarged Air Inlet with Grill Cover
- Cycle Time Improvement
- Boom Floating Control (Option)

MORE RELIABLE, MORE SUSTAINABLE

- Durable Cooling Module
- Reinforced Pin, Bush and Polymer Shim
- Reinforced Durability of Upper and Lower Structure and Attachments
- Hi-grade (High-pressure) Hoses

INFOTAINMENT FRONTIER

- Intelligent and Wide Cluster
- Haptic Control
- Wi-Fi Direct with Smart Phone (Miracast)
- Proportional Auxiliary Hydraulic System
- New Audio System
- New Air Conditioning System

HX180 L

MODERN COMFORT, SIMPLE AND SAFE SOLUTION

- AAVM (Advanced Around View Monitoring) Camera System (Option)
- Easy Access to DEF/AdBlue® Supply System
- Hi-mate (Remote Management System) (Option)
- Swing Lock System (Option)
- Fine Swing Control (Option)

*Photo may include optional equipment.

*Photo may include optional equipment.

Cycle Time Improvement

The HX Series provides higher productivity on the site by faster operation: it loads trucks up to 4% faster and levels up to 12% faster than the 9 Series.

Boom Floating Control (Option)

In order to achieve efficient leveling work by arm-in and arm-out operation with the boom fixed, the HX Series applies boom floating control, allowing stable operation even in high-load work.

WORK MAX, WORTH MAX

Fuel Efficient System, Allows Great Performance

The HX Series has an eco-friendly, high-performance engine which ensures both excellent fuel efficiency and high power. With outstanding operating performance proven by rigorous tests at various work sites, it will satisfy any customer's needs.

ECO Gauge

ECO Gauge enable economic operation of machines. The gauge level and color displays engine torque and fuel efficiency level. On top of that, the status of fuel consumption such as average rate and the total amount of fuel consumed are displayed. Hourly and daily based fuel consumption can be checked in the detailed menu as well.

IPC (Intelligent Power Control)

The IPC controls power control depending on work environments. Its mode can be selected and released on the monitor. On the excavation mode, pump flow can be easily controlled by a lever, reducing fuel consumption.

New Variable Power Control

The HX Series minimizes equipment input and output control signals to improve fuel efficiency. Its three-stage Power mode ensures the highest performance in any operating environment.

* P (power) mode: Maximizes speed and power of the equipment for heavy load work.
* S (standard) mode: Optimizes performance and fuel efficiency of the equipment for general load work.
* E (economy) mode: Improves the control system for light load work.

Electronic Viscous Fan Clutch

The electronic fan clutch reduces noise during operation by precisely controlling RPM depending on the hydraulic oil and coolant temperature of the working vehicle, and minimizes fuel consumption. It is also possible to shorten the warm up time of hydraulic oil.

Attachment Flow Control (Option)

The HX Series improves pump flow rate by independent control of two pumps. It optimizes attachments for effective flow rate setting depending on attachments (ten breaker types and ten crusher types), enabling various operations matching the site environments.

New Cooling System with Increased Air Flow

With the three-floor stacked cooling module improving air inflow, the HX Series provides excellent cooling performance by increasing heat dissipation and can be easily cleaned.

Enlarged Air Inlet with Grill Cover

Enlarged vent hole of the air inlet side cover and fine net grill to prevent penetration of foreign materials further improve durability.

MORE RELIABLE, MORE SUSTAINABLE

New Exterior Design for Robustness and Safety

The true value of the HX Series lies in its durability. The robust upper and lower frame structure that can endure external shock and high-load work and the attachments whose performance was proven by rigorous tests further show the real value of the HX Series in tough working environments and promise higher productivity.

Durable Cooling Module

The HX Series has a durable cooling module that passed stringent tests, demonstrating the highest productivity in tough working environments.

Reinforced Pin, Bush and Polymer Shim

The HX series improves lubricity of connecting parts between the equipment and attachments. Gaps with attachments are minimized by wear-resistant long-life pins, bushes and polymer shims, supporting the highest performance with invariable durability.

Reinforced Durability of Upper and Lower Structure and Attachments

The upper and lower structure and attachments of the HX Series have higher durability than demanded on the site, as proven through numerous tests including road tests and virtual simulation. The wear resistance of the bucket has been improved by use of new material.

*Photo may include optional equipment.

Hi-grade (High-pressure) Hoses

The HX Series uses high-pressure hoses with improved heat and pressure resistance, greatly increasing the durability of the equipment.

New Air Conditioning System

With further improved air conditioning and heating, the HX Series increases the APTC capacity by 15% to provide a pleasant environment for operators all the time. The ventilation was designed such that warm and cool air even reach operators' faces (increasing their work satisfaction) or allowing pleasant working environment.

INFOTAINMENT FRONTIER

Enhanced Instrument Panel for Easier Monitoring

Many electronic functions are concentrated on the most convenient spot for operators to ensure work efficiency. The highly-advanced infotainment system, a product of HHI's intensive information technology, enables both productivity and pleasant work at the same time! The HX Series of HHI provides higher value and pleasure to customers.

Intelligent and Wide Cluster

The 8-inch capacitive-type display (like smartphone display) of the HW Series is 30% larger than the previous model, delivering excellent legibility. The centralized switches on the display allow convenience of checking the urea level and temperature outside the cabin. The audio AUX, air conditioner, heater interoperation, wiper, lamps, overload warnings, travel alarm and inclination sensor also maximize operator's convenience.

Wi-Fi Direct with Smart Phone (Miracast)

The Miracast system based on Wi-Fi of the operator's smart phone enables easy and convenient use of various features of the smart phone on the big screen including navigation, web surfing, viewing of videos, and listening to music. (For Android mobile phone now)

Proportional Auxiliary Hydraulic System

· Opt: Proportional control switch for better speed control
· Enlarge the operation convenience

Haptic Control

The integrated jog shuttle-type haptic controller applies to the accelerator, remote air conditioner controller and operation of the cluster, allowing convenient operation. In the event of failure of the haptic switch, the emergency mode is activated on the cluster to ensure fail-safe function.

New Audio System

Radio player, USB-based MP3 player, integrated Bluetooth hands-free feature, and built-in microphone allow convenient phone calls while in work and in transit. The radio player was moved to the right side from the rear, allowing easier access.

MODERN COMFORT, SIMPLE AND SAFE SOLUTION

New Cabin for More Comfort

Low noise, low vibration, and ergonomic design make the cabin space more comfortable and pleasant! With focus on safety and convenience of operators, the HX Series allows rapid and safe equipment inspection anytime and anywhere, providing an optimal environment for operators to work.

AAVM (Advanced Around View Monitoring) Camera System (Option)

The HX Series has a state-of-the-art AAVM video camera system to secure field of vision for operators in all directions, thereby preventing accidents. Operators can easily check the workplace in the front, rear and to the right and left.

* AAVM (Advanced Around View Monitoring): Secure field of vision in all directions by nine views including 3D bird's eye view and 2D/4CH view.
* IMOD (Intelligent Moving Object Detection): Inform when people or dangerous objects are detected within the range of operation (recognition distance: 5 m).

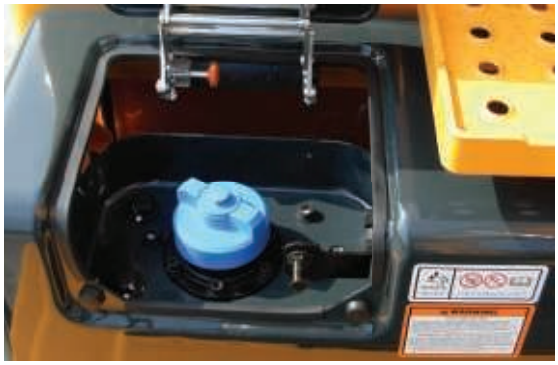

Easy Access to DEF/AdBlue® Supply System

The DEF/AdBlue® tank is installed inside the tool box and its inlet is remotely located for easy access and convenient supply. Warning of overfill is given by a red lamp signal. The DEF/AdBlue® supply module is attached on the side of the fuel tank for easy maintenance and filter replacement.

Hi-mate (Remote Management System)

Hi-mate, Hyundai's proprietary remote management system, provides operators and dealer service personnel access to vital service and diagnostic information on the machine from any computer with internet access. Users can pinpoint machine location using digital mapping and set machine work boundaries, reducing the need for multiple service calls. Hi-mate saves time and money for the owner and dealer by promoting preventative maintenance and reducing machine downtime.

* Operation of the system may be affected by the condition of tele-communication signal

*Photo may include optional equipment.

Swing Lock System (Option)

Swing Lock System is provided to maintain stability when swing movement needs to be limited, improving operating speed and productivity.

Fine Swing Control (Option)

Fine swing control is available for customer's convenience when users want to control fine swing.

SPECIFICATIONS

ENGINE

Maker / Model			Perkins / 1204F
Type			Water-cooled, 4-cycle diesel, 4-cylinder in-line, Direct injection, Turbocharged, Charge and air cooled
Rated flywheel horse power	SAE	J1995 (gross)	102.1 kW (137 HP) at 2,050 rpm
		J1349 (net)	96 kW (128 HP) at 2,050 rpm
	DIN	6271/1 (gross)	102.1 kW (139 PS) at 2,050 rpm
		6271/1 (net)	96 kW (130 PS) at 2,050 rpm
Max. torque			57.1 kgf·m (413 lbf·ft) at 1,400 rpm
Bore × stroke			105 × 127 mm (4.13" × 5.0")
Piston displacement			4,400 cc (268.5 cu in)
Batteries			2 × 12 V × 100 Ah
Starting motor			24 V - 4.5 kW
Alternator			24 V - 100 A

HYDRAULIC SYSTEM

MAIN PUMP

Type	Two variable displacement piston pumps
Max. flow	2 × 164 ℓ/min (43.3 US gpm / 36.1 UK gpm)
Sub-pump for pilot circuit	Gear pump

Cross-sensing and fuel saving pump system

HYDRAULIC MOTORS

Travel	Two speed axial pistons motor with brake valve and parking brake
Swing	Axial piston motor with automatic brake

RELIEF VALVE SETTING

Implement circuits	350 kgf/cm² (4,980 psi)
Travel	350 kgf/cm² (4,980 psi)
Power boost (boom, arm, bucket)	380 kgf/cm² (5,400 psi)
Swing circuit	285 kgf/cm² (4,054 psi)
Pilot circuit	40 kgf/cm² (570 psi)
Service valve	Installed

HYDRAULIC CYLINDERS

No. of cylinder bore × stroke		Boom: 2 - 115 x 1,090 mm (4.5" x 42.9")
		Arm: 1 - 120 x 1,355 mm (4.7" x 53.3")
		Bucket: 1 - 110 x 995 mm (4.3" x 39.2")
		Dozer Blade: 2 - 110 x 320 mm (4.3" x 12.6")
	2-Piece Boom	1st: 2 - 115 x 960 mm (4.5" x 37.8")
		2nd: 1 - 160 x 650 mm (6.3" x 25.6")

DRIVES & BRAKES

Drive method	Fully hydrostatic type
Drive motor	Two speed axial pistons motor
Reduction system	Planetary reduction gear
Max. drawbar pull	17,000 kgf (37,500 lbf)
Max. travel speed (high / low)	5.3 km/hr (3.3 mph) / 3.2 km/hr (2.0 mph)
Gradeability	35° (70%)
Parking brake	Multi wet disc

CONTROL

Pilot pressure operated joysticks and pedals with detachable lever provide almost effortless and fatigueless operation.

Pilot control	Two joysticks with one safety lever (LH): Swing and arm (RH): Boom and bucket (ISO)

CONTROL

Traveling and steering	Two levers with pedals
Engine throttle	Electric, Dial type
Lights	Two lights mounted on the boom, Two on the upper frame

SWING SYSTEM

Swing motor	Axial piston motor
Swing reduction	Planetary gear reduction
Swing bearing lubrication	Grease-bathed
Swing brake	Multi wet disc
Swing speed	10.3 rpm

SERVICE REFILL CAPACITIES

Re-filling	liter	US gal	UK gal
Fuel tank	290	76.6	63.8
Engine coolant	27.5	7.3	6.0
Engine oil	10.5	2.8	2.3
Swing device - gear oil	6.2	1.6	1.4
Final drive (each) - gear oil	5.8	1.5	1.3
Hydraulic system (including tank)	240	63.4	52.8
Hydraulic tank	125	33.0	27.5
DEF/AdBlue® tank	19	5.0	4.2

UNDERCARRIAGE

The X-leg type center frame is integrally welded with reinforced box-section track frames. The undercarriage includes lubricated rollers, idlers, track adjusters with shock absorbing springs and sprockets and a track chain with double or triple grouser shoes.

Center frame	X - leg type
Track frame	Pentagonal box type
No. of shoes on each side	51 EA
No. of carrier roller on each side	2 EA
No. of track roller on each side	7 EA
No. of rail guard on each side	1 EA

OPERATING WEIGHT (APPROXIMATE)

Operating weight, including 5,100 mm (16' 9") boom; 2,600 mm (8' 6") arm; SAE heaped 0.76 m³ (0.99 yd³) bucket, lubricant, coolant, full fuel tank, full hydraulic tank and all standard equipments.

OPERATING WEIGHT

Shoes		Operating weight		Ground pressure
Type	Width mm (in)		kg (lb)	kgf / cm² (psi)
Triple grouser	500 (20")	HX180L	18,540 (40,870)	0.51 (7.25)
		HX180LD	19,440 (42,860)	0.54 (7.68)
		HX180NL	18,440 (40,650)	0.51 (7.25)
	600 (24")	HX180L	18,800 (41,450)	0.43 (6.11)
		HX180LD	19,700 (43,430)	0.45 (6.40)
		HX180NL	18,700 (41,230)	0.43 (6.11)
	700 (28")	HX180L	19,050 (42,000)	0.38 (5.40)
		HX180LD	19,950 (43,980)	0.39 (5.55)
		HX180NL	18,950 (41,780)	0.37 (5.26)
	800 (32")	HX180L	19,310 (42,570)	0.33 (4.69)
		HX180LD	20,210 (44,560)	0.35 (4.98)
		HX180NL	19,210 (42,350)	0.33 (4.69)

BUCKET SELECTION GUIDE & DIGGING FORCE

BUCKETS

SAE heaped m^3 (yd^3)	0.39 (0.51)	0.50 (0.65)	0.64 (0.84) 0.70 (0.92) 0.76 (0.99)	0.89 (1.16) 1.05 (1.37)	◈ 0.69 (0.90)	⦿ 0.75 (0.98)

Capacity m^3 (yd^3)		Width mm (in)		Weight kg (lb)	Recommendation mm (ft.in)				
					5,100 (16' 9") Mono-Boom			5,100 (16' 9") 2-Piece boom	
SAE heaped	CECE heaped	Without side cutters	With side cutters		2,200 (7' 3") Arm	2,600 (8' 6") Arm	3,100 (10' 2") Arm	2,200 (7' 3") Arm	2,600 (8' 6") Arm
0.39 (0.51)	0.34 (0.44)	620 (24.4)	740 (29.1)	410 (900)	●	●	●	●	●
0.50 (0.65)	0.44 (0.58)	760 (29.9)	880 (34.6)	470 (1,040)	●	●	●	●	●
0.64 (0.84)	0.55 (0.72)	920 (36.2)	1,040 (40.9)	510 (1,120)	●	●	■	●	●
0.70 (0.92)	0.60 (0.78)	990 (39.0)	1,110 (43.7)	600 (1,320)	●	●	■	●	■
0.76 (0.99)	0.65 (0.85)	1,060 (41.7)	1,180 (46.5)	620 (1,370)	●	■	▲	■	▲
0.89 (1.16)	0.77 (1.01)	1,220 (48.0)	1,340 (52.8)	610 (1,340)	■	▲	-	■	▲
1.05 (1.37)	0.90 (1.18)	1,400 (55.1)	1,520 (59.8)	680 (1,500)	▲	▲	-	▲	-
◈ 0.69 (0.90)	0.62 (0.81)	990 (39.0)	-	720 (1,590)	●	■	▲	■	▲
◆ 0.75 (0.98)	0.65 (0.85)	1,820 (71.7)	-	540 (1,190)	●	■	■	●	■

◈ Heavy duty bucket
⦿ Ditching bucket

● : Applicable for materials with density of 2,000 kg/m^3 (3,370 lb/yd^3) or less
■ : Applicable for materials with density of 1,600 kg/m^3 (2,700 lb/yd^3) or less
▲ : Applicable for materials with density of 1,100 kg/m^3 (1,850 lb/yd^3) or less

ATTACHMENT

Booms and arms are welded with a low-stress, full-box section design.
5.1 m (16' 9") Mono-boom and 5.1 m (16' 9") 2-Piece boom and 2.20 m (7' 3"); 2.60 m (8' 6") & 3.1 m (10' 2") Arms are available.

DIGGING FORCE

Arm	Length	mm (ft.in)	2,200 (7' 3")	2,600 (8' 6")	3,100 (10' 2")	Remarks:
	Weight	kg (lb)	750 (1,560)	810 (1,790)	890 (1,960)	
Bucket digging force	SAE	kN	107.9 [117.2]	107.9 [117.2]	107.9 [117.2]	[ ]: Power Boost
		kgf	11,000 [11,940]	11,000 [11,940]	11,000 [11,940]	
		lbf	24,250 [26,330]	24,250 [26,330]	24,250 [26,330]	
	ISO	kN	123.6 [134.2]	123.6 [134.2]	123.6 [134.2]	
		kgf	12,600 [13,680]	12,600 [13,680]	12,600 [13,680]	
		lbf	27,780 [30,160]	27,780 [30,160]	27,780 [30,160]	
Arm crowd force	SAE	kN	87.2 [94.7]	77.3 [83.9]	69.0 [74.9]	
		kgf	8,890 [9,650]	7,880 [8,560]	7,030 [7,630]	
		lbf	19,600 [21,280]	17,370 [18,860]	15,500 [16,830]	
	ISO	kN	91.0 [98.8]	80.3 [87.2]	71.4 [77.5]	
		kgf	9,280 [10,080]	8,190 [8,890]	7,280 [7,900]	
		lbf	20,460 [22,210]	18,060 [19,600]	16,050 [17,430]	

Note : Arm weight includes bucket cylinder, linkage and pin

DIMENSIONS & WORKING RANGE

HX180 L MONO-BOOM DIMENSIONS

5.1 m (16' 9") Mono-boom and 2.2 m (7' 3"); 2.6 m (8' 6") & 3.1 m (10' 2") Arm.

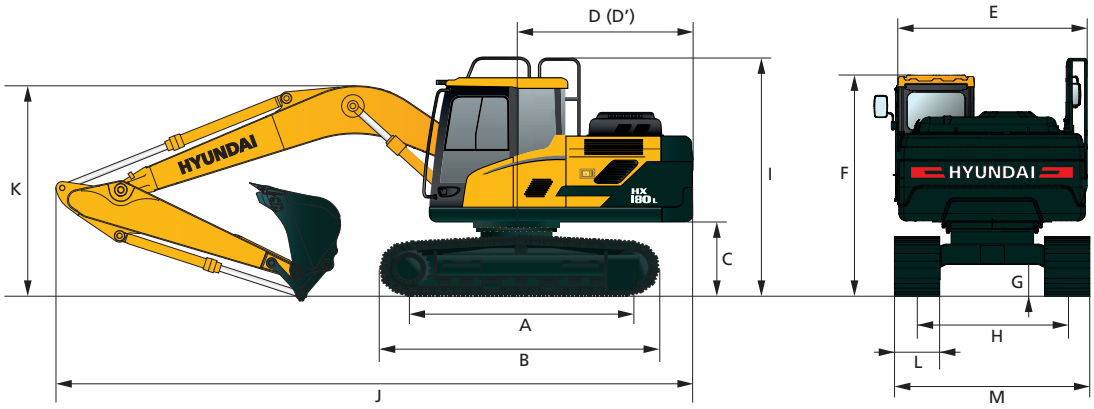

Unit : mm (ft·in)

A	Tumbler distance	3,360 (11' 0")
B	Overall length of crawler	4,116 (13' 6")
C	Ground clearance of counterweight	1,055 (3' 6")
D	Tail swing radius	2,480 (8' 2")
D'	Rear-end length	2,480 (8' 2")
E	Overall width of upperstructure	2,475 (8' 1")
F	Overall height of cab	2,980 (9' 9")
G	Min. ground clearance	460 (1' 6")
H	Track gauge	2,250 (7' 5")
I	Overall height of guardrail	3,235 (10' 7")

	Boom length	5,100 (16' 9")			
	Arm length	2,200 (7' 3")	2,600 (8' 6")	3,100 (10' 2")	
J	Overall length	8,660 (28' 5")	8,650 (28' 5")	8,650 (28' 5")	
K	Overall height of boom	3,010 (9' 11")	2,990 (9' 10")	3,150 (10' 4')	
L	Track shoe width	500 (20")	600 (24")	700 (28")	800 (32")
M	Overall width	2,750 (9' 0")	2,850 (9' 4")	2,950 (9' 8")	3,050 (10' 0")

HX180 L MONO-BOOM WORKING RANGE

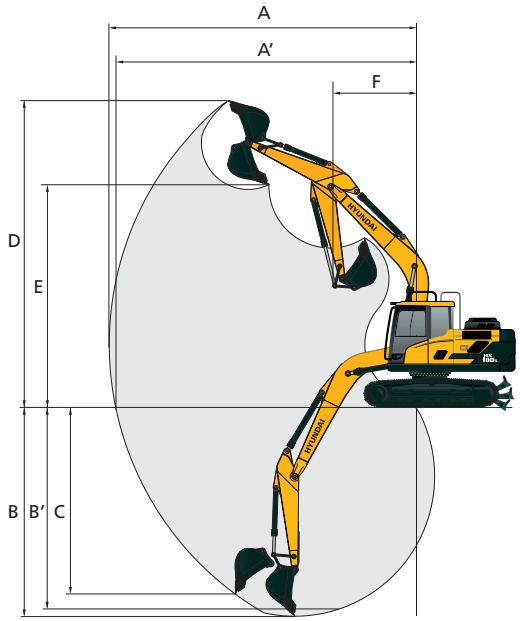

Unit : mm (ft·in)

	Boom length	5,100 (16' 9")		
	Arm length	2,200 (7' 3")	2,600 (8' 6")	3,100 (10' 2")
A	Max. digging reach	8,690 (28' 6")	9,020 (29' 7")	9,450 (31' 0")
A'	Max. digging reach on ground	8,530 (27' 12")	8,860 (29' 1")	9,300 (30' 6")
B	Max. digging depth	5,660 (18' 7")	6,060 (19' 11")	6,560 (21' 6")
B'	Max. digging depth (8' level)	5,430 (17' 10")	5,850 (19' 2")	6,370 (20' 11")
C	Max. vertical wall digging depth	5,120 (16' 10")	5,380 (17' 8")	5,710 (18' 9")
D	Max. digging height	8,750 (28' 8")	8,840 (29' 0")	8,980 (29' 6")
E	Max. dumping height	6,110 (20' 1")	6,220 (20' 5")	6,390 (21' 0")
F	Min. front swing radius	3,180 (10' 5")	3,170 (10' 5")	3,170 (10' 5")

DIMENSIONS & WORKING RANGE

HX180 L 2-PIECE BOOM DIMENSIONS

5.1 m (16' 9") 2-piece boom and 2.2 m (7' 3"); 2.6 m (8' 6") Arm.

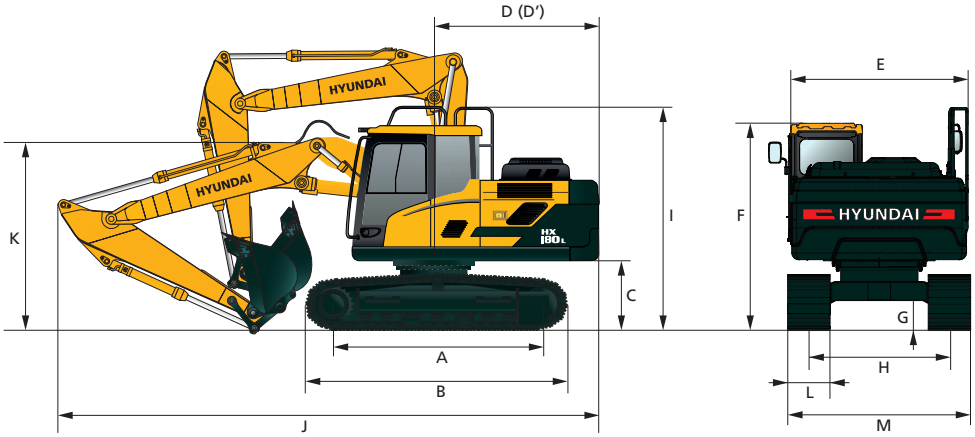

Unit : mm (ft·in)

A	Tumbler distance	3,360 (11' 0")
B	Overall length of crawler	4,116 (13' 6")
C	Ground clearance of counterweight	1,055 (3' 6")
D	Tail swing radius	2,480 (8' 2")
D'	Rear-end length	2,480 (8' 2")
E	Overall width of upperstructure	2,475 (8' 1")
F	Overall height of cab	2,980 (9' 9")
G	Min. ground clearance	460 (1' 6")
H	Track gauge	2,000 (6' 7")
I	Overall height of guardrail	3,235 (10' 7")

	Boom length	5,100 (16' 9")			
	Arm length	2,200 (7' 3")		2,600 (8' 6")	
J	Overall length	8,610 (28' 3")		8,610 (28' 3")	
K	Overall height of boom	3,040 (9' 12")		3,060 (10' 0")	
L	Track shoe width	500 (20")	600 (24")	700 (28")	800 (32")
M	Overall width	2,750 (9' 0")	2,850 (9' 4")	2,950 (9' 8")	3,050 (10' 0")

HX180 L 2-PIECE BOOM WORKING RANGE

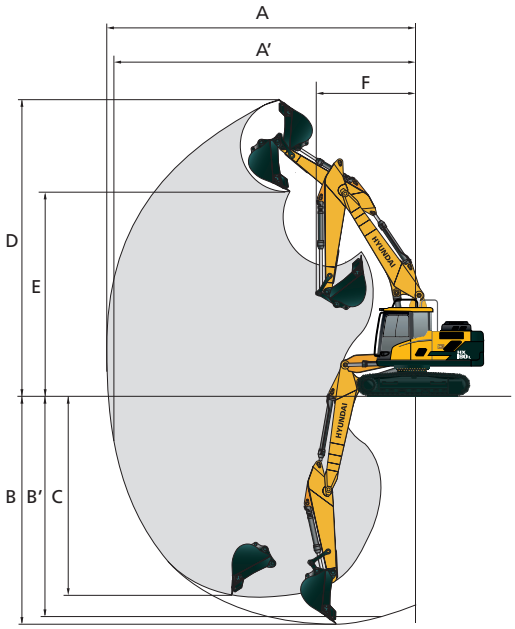

Unit : mm (ft·in)

	Boom length	5,100 (16' 9") 2-piece boom	
	Arm length	2,200 (7' 3")	2,600 (8' 6")
A	Max. digging reach	8,690 (28' 6")	9,110 (29' 11")
A'	Max. digging reach on ground	8,530 (27' 12")	8,950 (29' 4")
B	Max. digging depth	5,660 (18' 7")	5,830 (19' 2")
B'	Max. digging depth (8' level)	5,430 (17' 10")	5,730 (18' 10")
C	Max. vertical wall digging depth	5,120 (16' 10")	4,980 (16' 4")
D	Max. digging height	8,750 (28' 8")	9,610 (31' 6")
E	Max. dumping height	6,110 (20' 10")	6,910 (22' 8")
F	Min. front swing radius	3,180 (10' 5")	2,970 (9' 9")

DIMENSIONS & WORKING RANGE

HX180 LD MONO-BOOM DIMENSIONS

5.1 m (16' 9") Mono-boom and 2.2 m (7' 3"); 2.6 m (8' 6") & 3.1 m (10' 2") Arm.

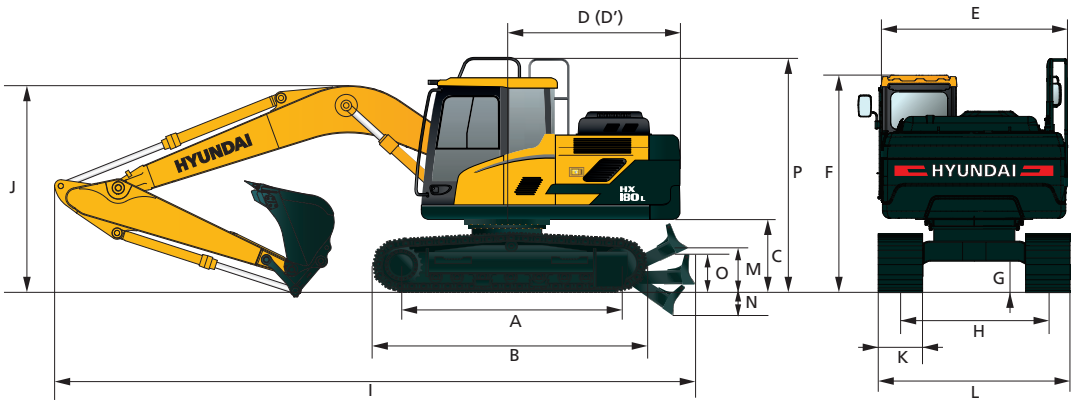

Unit : mm (ft·in)

A	Tumbler distance	3,360 (11' 0")
B	Overall length of crawler	4,116 (13' 6")
C	Ground clearance of counterweight	1,055 (3' 6")
D	Tail swing radius	2,480 (8' 2")
D'	Rear-end length	2,480 (8' 2")
E	Overall width of upperstructure	2,475 (8' 1")
F	Overall height of cab	2,980 (9' 9")
G	Min. ground clearance	460 (1' 6")
H	Track gauge	2,250 (7' 5")
M	Ground clearance of Dozer blade up	615 (2' 0")
N	Depth of dozer blade down	675 (2' 3")
O	Height of dozer blade	640 (2' 1")
P	Overall height of guardrail	3,235 (10' 7")

	Boom length	5,100 (16' 9")			
	Arm length	2,200 (7' 3")	2,600 (8' 6")	3,100 (10' 2")	
I	Overall length	9,110 (29' 11")	9,100 (29' 10")	9,100 (29' 10")	
J	Overall height of boom	3,010 (9' 11")	2,990 (9' 10")	3,150 (10' 4')	
K	Track shoe width	500 (20")	600 (24")	700 (28")	800 (32")
L	Overall width	2,750 (9' 1")	2,850 (9' 5")	2,950 (9' 9")	3,050 (10' 1")

HX180 LD MONO-BOOM WORKING RANGE

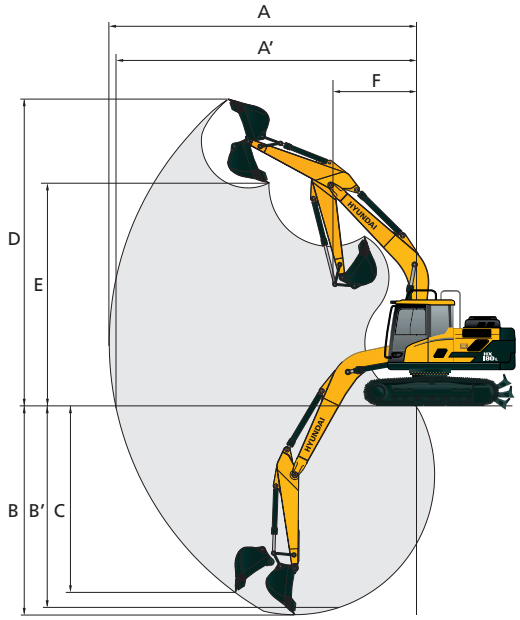

Unit : mm (ft·in)

	Boom length	5,100 (16' 9")		
	Arm length	2,200 (7' 3")	2,600 (8' 6")	3,100 (10' 2")
A	Max. digging reach	8,690 (28' 6")	9,020 (29' 7")	9,450 (31' 0")
A'	Max. digging reach on ground	8,530 (27' 12")	8,860 (29' 1")	9,300 (30' 6")
B	Max. digging depth	5,660 (18' 7")	6,060 (19' 11")	6,560 (21' 6")
B'	Max. digging depth (8' level)	5,430 (17' 10")	5,850 (19' 2")	6,370 (20' 11")
C	Max. vertical wall digging depth	5,120 (16' 10")	5,380 (17' 8")	5,710 (18' 9")
D	Max. digging height	8,750 (28' 8")	8,840 (29' 0")	8,980 (29' 6")
E	Max. dumping height	6,110 (20' 1")	6,220 (20' 5")	6,390 (21' 0")
F	Min. front swing radius	3,180 (10' 5")	3,170 (10' 5")	3,170 (10' 5")

DIMENSIONS & WORKING RANGE

HX180 NL MONO-BOOM DIMENSIONS

5.1 m (16' 9") Mono-boom and 2.2 m (7' 3"); 2.6 m (8' 6") Arm.

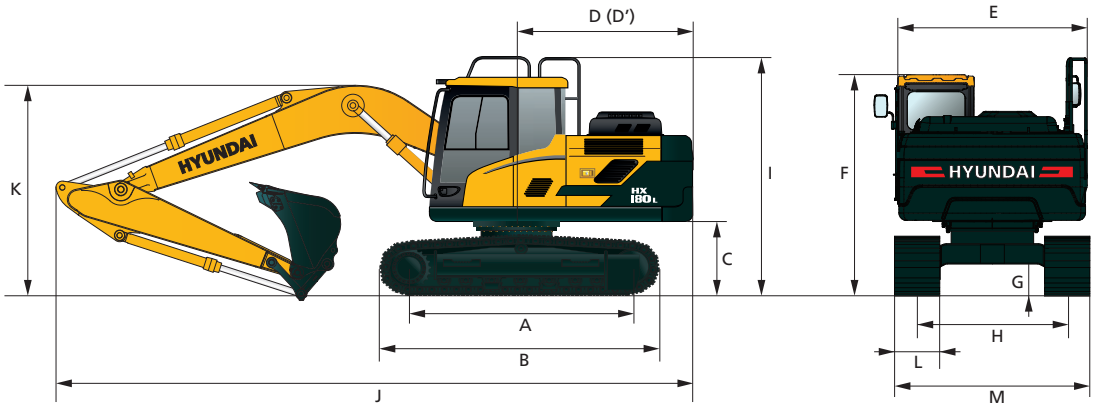

Unit : mm (ft·in)

A	Tumbler distance	3,360 (11' 0")
B	Overall length of crawler	4,116 (13' 6")
C	Ground clearance of counterweight	1,055 (3' 6")
D	Tail swing radius	2,480 (8' 2")
D'	Rear-end length	2,480 (8' 2")
E	Overall width of upperstructure	2,475 (8' 1")
F	Overall height of cab	2,980 (9' 9")
G	Min. ground clearance	460 (1' 6")
H	Track gauge	2,250 (7' 5")
I	Overall height of guardrail	3,235 (10' 7")

	Boom length	5,100 (16' 9")		
	Arm length	2,200 (7' 3")	2,600 (8' 6")	3,100 (10' 2")
J	Overall length	8,660 (28' 5")	8,650 (28' 5")	8,650 (28' 5")
K	Overall height of boom	3,010 (9' 11")	2,990 (9' 10")	3,150 (10' 4')
L	Track shoe width	500 (20")	600 (24")	700 (28")
M	Overall width	2,500 (8' 2")	2,600 (8' 6")	2,700 (8' 8")

HX180 NL MONO-BOOM WORKING RANGE

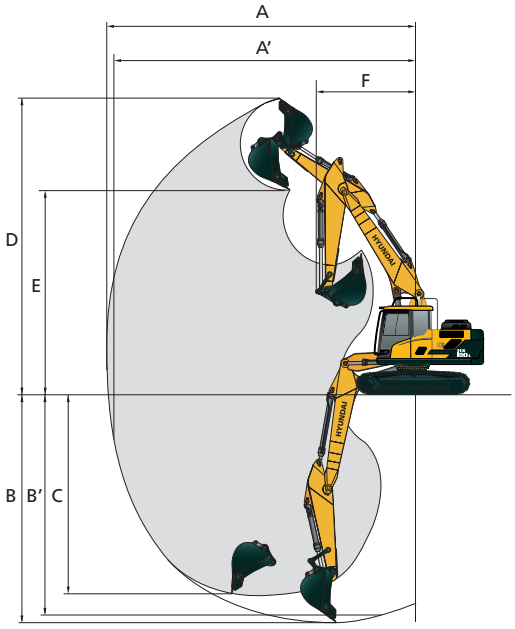

Unit : mm (ft·in)

	Boom length	5,100 (16' 9")		
	Arm length	2,200 (7' 3")	2,600 (8' 6")	3,100 (10' 2")
A	Max. digging reach	8,690 (28' 6")	9,020 (29' 7")	9,450 (31' 0")
A'	Max. digging reach on ground	8,530 (27' 12")	8,860 (29' 1")	9,300 (30' 6")
B	Max. digging depth	5,660 (18' 7")	6,060 (19' 11")	6,560 (21' 6")
B'	Max. digging depth (8' level)	5,430 (17' 10")	5,850 (19' 2")	6,370 (20' 11")
C	Max. vertical wall digging depth	5,120 (16' 10")	5,380 (17' 8")	5,710 (18' 9")
D	Max. digging height	8,750 (28' 8")	8,840 (29' 0")	8,980 (29' 6")
E	Max. dumping height	6,110 (20' 1")	6,220 (20' 5")	6,390 (21' 0")
F	Min. front swing radius	3,180 (10' 5")	3,170 (10' 5")	3,170 (10' 5")

LIFTING CAPACITY

Rating over-front Rating over-side or 360 degrees

HX180 L MONO-BOOM

Boom: 5.1 m (16' 9") / Arm: 2.2 m (7' 3") / Bucket: 0.76 m³ (0.92 yd³) SAE heaped / Shoe: 600 mm (24") triple grouser.

Load point height m (ft)		Load radius 1.5 m (5 ft)		3.0 m (10 ft)		4.5 m (15 ft)		6.0 m (20 ft)		At max. reach Capacity		Reach
												m (ft)
7.5 m	kg									*3700	*3700	5.60
(25 ft)	lb									*8160	*8160	(18.4)
6.0 m	kg									*3620	2950	6.98
(20 ft)	lb									*7980	6500	(22.9)
4.5 m	kg					*4530	*4530	*4060	3750	*3640	2400	7.76
(15 ft)	lb					*9990	*9990	*8950	8270	*8020	5290	(25.5)
3.0m	kg			*9050	*9050	*5750	5710	*4550	3610	3400	2150	8.15
(10 ft)	lb			*19950	*19950	*12680	12590	*10030	7960	7500	4740	(26.7)
1.5 m	kg					*6980	5340	*5110	3440	3320	2080	8.20
(5 ft)	lb					*15390	17770	*11270	7580	7320	4590	(26.9)
Ground	kg			*7160	*7160	*7630	5120	5330	3320	3470	2170	7.94
Line	lb			*15790	*15790	*16820	11290	11750	7320	7650	4780	(26.0)
-1.5 m	kg	*7070	*7070	*11190	9860	*7540	5050	5280	3280	*3920	2480	7.31
(-5 ft)	lb	*15590	*15590	*24670	21740	*16620	11130	11640	7230	*8640	5470	(24.0)
-3.0 m	kg	*11260	*11260	*9570	*9570	*6620	5110			*3710	3280	6.19
(-10 ft)	lb	*24820	*24820	*21100	*21100	*14590	11270			*8180	7230	(20.3)
-4.5 m	kg			*6220	*6220							
(-15 ft)	lb			*13710	*13710							

Boom: 5.1 m (16' 9") / Arm: 2.6 m (8' 6") / Bucket: 0.76 m³ (0.92 yd³) SAE heaped / Shoe: 600 mm (24") triple grouser.

Load point height m (ft)		Load radius 1.5 m (5 ft)		3.0 m (10 ft)		4.5 m (15 ft)		6.0 m (20 ft)		7.5 m (25 ft)		At max. reach Capacity		Reach
														m (ft)
7.5 m	kg											*3340	*3340	6.11
(25 ft)	lb											*7360	*7360	(20.0)
6.0 m	kg							*2990	*2990			*3310	2690	7.37
(20 ft)	lb							*6590	*6590			*7300	5930	(24.2)
4.5 m	kg							*3720	*3720			*3370	2210	8.11
(15 ft)	lb							*8200	*8200			*7430	4870	(26.6)
3.0m	kg			*7870	*7870	*5270	*5270	*4260	3620	*2780	2460	3170	1990	8.48
(10 ft)	lb			*17350	*17350	*11620	*11620	*9390	7980	*6130	5420	6990	4390	(27.8)
1.5 m	kg			*8160	*8160	*6610	5360	*4880	3430	*3610	2380	3090	1920	8.53
(5 ft)	lb			*17990	*17990	*14570	11820	*10760	7560	*7960	5250	6810	4230	(28.0)
Ground	kg			*7950	*7950	*7450	5090	5300	3290	*3430	2310	3210	1990	8.28
Line	lb			*17530	*17530	*16420	11220	11680	7250	*7560	5090	7080	4390	(27.2)
-1.5 m	kg	*6750	*6750	*10730	9740	*7570	4990	5220	3220			3610	2240	7.69
(-5 ft)	lb	*14880	*14880	*23660	21470	*16690	11000	11510	7100			7960	4940	(25.2)
-3.0 m	kg	*10030	*10030	*10220	9860	*6910	5010	*4820	3250			*3700	2870	6.64
(-10 ft)	lb	*22110	*22110	*22530	21740	*15230	11050	*10630	7170			*8160	6330	(21.8)
-4.5 m	kg			*7420	*7420	*4910	*4910							
(-15 ft)	lb			*16360	*16360	*10820	*10820							

Boom: 5.1 m (16' 9") / Arm: 3.1 m (11' 1") / Bucket: 0.76 m³ (0.92 yd³) SAE heaped / Shoe: 600 mm (24") triple grouser.

Load point height m (ft)		Load radius 1.5 m (5 ft)		3.0 m (10 ft)		4.5 m (15 ft)		6.0 m (20 ft)		7.5 m (25 ft)		At max. reach Capacity		Reach
														m (ft)
7.5 m	kg											*2960	*2960	6.73
(25 ft)	lb											*6530	*6530	(22.1)
6.0 m	kg							*2830	*2830			*2980	2380	7.88
(20 ft)	lb							*6240	*6240			*6570	5250	(25.9)
4.5 m	kg							*3310	*3310	*2090	*2090	*3050	1990	8.57
(15 ft)	lb							*7300	*7300	*4610	*4610	*6720	4390	(28.1)
3.0m	kg					*4660	*4660	*3880	3640	*3050	2460	2900	1790	8.91
(10 ft)	lb					*10270	*10270	*8550	8020	*6720	5420	6390	3950	(29.2)
1.5 m	kg			*10170	*10170	*6110	5420	*4570	3440	3780	2360	2820	1730	8.96
(5 ft)	lb			*22420	*22420	*13470	11950	*10080	7580	8330	5200	6220	3810	(29.4)
Ground	kg			*8710	*8710	*7170	5090	*5130	3270	3690	2280	2920	1780	8.73
Line	lb			*19200	*19200	*15810	11220	*11310	7210	8140	5030	6440	3920	(28.6)
-1.5 m	kg	*6350	*6350	*10370	9640	*7530	4940	5170	3170	*3200	2230	3230	1980	8.17
(-5 ft)	lb	*14000	*14000	*22860	21250	*16600	10890	11400	6990	*7050	4920	7120	4370	(26.8)
-3.0 m	kg	*8990	*8990	*10850	9700	*7150	4920	*5070	3160			*3580	2460	7.21
(-10 ft)	lb	*19820	*19820	*23920	21380	*15760	10850	*11180	6970			*7890	5420	(23.7)
-4.5 m	kg	*12470	*12470	*8590	*8590	*5740	5040					*3320	*3320	5.59
(-15 ft)	lb	*27490	*27490	*18940	*18940	*12650	11110					*7320	*7320	(18.3)

1. Lifting capacity are based on SAE J1097 and ISO 10567.
2. Lifting capacity of the ROBEX series does not exceed 75% of tipping load with the machine on firm, level ground or 87% of full hydraulic capacity.
3. The load point is a hook located on the back of the bucket.
4. (*) indicates load limited by hydraulic capacity.

LIFTING CAPACITY

Rating over-front Rating over-side or 360 degrees

HX180 L 2-PIECE BOOM

2-piece boom: 5.1 m (16' 9") / Arm: 2.2 m (7' 3") / Bucket: 0.76 m³ (0.92 yd³) SAE heaped / Shoe: 600 mm (24") triple grouser.

Load point height m (ft)		Load radius										At max. reach		
		1.5 m (5 ft)		3.0 m (10 ft)		4.5 m (15 ft)		6.0 m (20 ft)		7.5 m (25 ft)		Capacity		Reach
														m (ft)
6.0 m	kg											*3680	2880	7.06
(20 ft)	lb											*8110	6350	(23.2)
4.5 m	kg							*4110	3750			*3640	2340	7.83
(15 ft)	lb							*9060	8270			*8020	5160	(25.7)
3.0m	kg					*5800	5720	*4560	3600			3370	2100	8.21
(10 ft)	lb					*12790	12610	*10050	7940			7430	4630	(26.9)
1.5 m	kg					*6940	5320	*5080	3430	*3390	2380	3290	2040	8.27
(5 ft)	lb					*15300	11730	*11200	7560	*7470	5250	7250	4500	(27.1)
Ground	kg			*6260	*6260	*7520	5090	5350	3300			3440	2100	8.01
Line	lb			*13800	*13800	*16580	11220	11790	7280			7580	4700	(26.3)
-1.5 m	kg	*6250	*6250	*10390	9820	*7360	5020	*5270	3260			*3640	2440	7.39
(-5 ft)	lb	*13780	*13780	*22910	21650	*16230	11070	*11620	7190			*8020	5380	(24.2)
-3.0 m	kg			*9080	*9080	*6340	5100					*3240	3230	6.28
(-10 ft)	lb			*20020	*20020	*13980	11240					*7140	7120	(20.6)

2-piece boom: 5.1 m (16' 9") / Arm: 2.6 m (8' 6") / Bucket: 0.76 m³ (0.92 yd³) SAE heaped / Shoe: 600 mm (24") triple grouser.

Load point height m (ft)		Load radius										At max. reach		
		1.5 m (5 ft)		3.0 m (10 ft)		4.5 m (15 ft)		6.0 m (20 ft)		7.5 m (25 ft)		Capacity		Reach
														m (ft)
6.0 m	kg											*3380	2610	7.48
(20 ft)	lb											*7450	5750	(24.5)
4.5 m	kg											*3370	2150	8.20
(15 ft)	lb											*7430	4740	(26.9)
3.0m	kg							*4280	3620	*3190	2440	3130	1930	8.57
(10 ft)	lb							*9440	7980	*7030	5380	6900	4250	(28.1)
1.5 m	kg			*7050	*7050	*6590	5350	*4860	3420	3810	2360	3050	1870	8.62
(5 ft)	lb			*15540	*15540	*14530	11790	*10710	7540	8400	5200	6720	4120	(28.3)
Ground	kg			*7110	*7110	*7360	5060	*5270	3270	3740	2300	3170	1940	8.37
Line	lb			*15670	*15670	*16230	11160	*11620	7210	8250	5070	6990	4280	(27.5)
-1.5 m	kg	*6090	*6090	*10020	9690	*7410	4960	5240	3200			*3500	2200	7.78
(-5 ft)	lb	*13430	*13430	*22090	21360	*16340	10930	11550	7050			*7720	4850	(25.5)
-3.0 m	kg	*9550	*9550	*9790	*9790	*6670	5000	*4630	3240			*3280	2810	6.76
(-10 ft)	lb	*21050	*21050	*21580	*21580	*14700	11020	*10210	7140			*7230	6190	(22.2)
-4.5 m	kg			*6770	*6770	*4500	*4500							
(-15 ft)	lb			*14930	*14930	*9920	*9920							

1. Lifting capacity are based on SAE J1097 and ISO 10567.
2. Lifting capacity of the ROBEX series does not exceed 75% of tipping load with the machine on firm, level ground or 87% of full hydraulic capacity.
3. The load point is a hook located on the back of the bucket.
4. (*) indicates load limited by hydraulic capacity.

LIFTING CAPACITY

Rating over-front Rating over-side or 360 degrees

HX180 NL MONO-BOOM

Boom: 5.1 m (16' 9") / Arm: 2.2 m (7' 3") / Bucket: 0.76 m³ (0.92 yd³) SAE heaped / Shoe: 600 mm (24") triple grouser.

Load point height m (ft)		Load radius 1.5 m (5 ft)		3.0 m (10 ft)		4.5 m (15 ft)		6.0 m (20 ft)		At max. reach Capacity		Reach
												m (ft)
7.5 m	kg									*3700	*3700	5.60
(25 ft)	lb									*8160	*8160	(18.4)
6.0 m	kg									*3620	2580	6.98
(20 ft)	lb									*7980	5690	(22.9)
4.5 m	kg					*4530	*4530	*4060	3280	*3640	2080	7.76
(15 ft)	lb					*9990	*9990	*8950	7230	*8020	4590	(25.5)
3.0m	kg			*9050	*9050	*5750	4970	*4550	3140	3380	1850	8.15
(10 ft)	lb			*19950	*19950	*12680	10960	*10030	6920	7450	4080	(26.7)
1.5 m	kg					*6980	4610	*5110	2980	3300	1780	8.20
(5 ft)	lb					*15390	10160	*11270	6570	7280	3920	(26.9)
Ground	kg			*7160	*7160	*7630	4390	5300	2860	3450	1860	7.94
Line	lb			*15790	*15790	*16820	9680	11680	6310	7610	4100	(26.0)
-1.5 m	kg	*7070	*7070	*11190	8250	*7540	4330	5250	2820	*3920	2140	7.31
(-5 ft)	lb	*15590	*15590	*24670	18190	*16620	9550	11570	6220	*8640	4720	(24.0)
-3.0 m	kg	*11260	*11260	*9570	8410	*6620	4390			*3710	2840	6.19
(-10 ft)	lb	*24820	*24820	*21100	18540	*14590	9680			*8180	6260	(20.3)
-4.5 m	kg			*6220	*6220							
(-15 ft)	lb			*13710	*13710							

Boom: 5.1 m (16' 9") / Arm: 2.6 m (8' 6") / Bucket: 0.76 m³ (0.92 yd³) SAE heaped / Shoe: 600 mm (24") triple grouser.

Load point height m (ft)		Load radius 1.5 m (5 ft)		3.0 m (10 ft)		4.5 m (15 ft)		6.0 m (20 ft)		7.5 m (25 ft)		At max. reach Capacity		Reach
														m (ft)
7.5 m	kg											*3340	3330	6.11
(25 ft)	lb											*7360	7340	(20.0)
6.0 m	kg							*2990	*2990			*3310	2340	7.37
(20 ft)	lb							*6590	*6590			*7300	5160	(24.2)
4.5 m	kg							*3720	3300			*3370	1910	8.11
(15 ft)	lb							*8200	7280			*7430	4210	(26.6)
3.0m	kg			*7870	*7870	*5270	5020	*4260	3150	*2780	2120	3150	1700	8.48
(10 ft)	lb			*17350	*17350	*11620	11070	*9390	6940	*6130	4670	6940	3750	(27.8)
1.5 m	kg			*8160	*8160	*6610	4630	*4880	2970	*3610	2040	3070	1640	8.53
(5 ft)	lb			*17990	*17990	*14570	10210	*10760	6550	*7960	4500	6770	3620	(28.0)
Ground	kg			*7950	*7950	*7450	4370	5270	2830	*3430	1980	3190	1700	8.28
Line	lb			*17530	*17530	*16420	9630	11620	6240	*7560	4370	7030	3750	(27.2)
-1.5 m	kg	*6750	*6750	*10730	8140	*7570	4260	5190	2760			3580	1920	7.69
(-5 ft)	lb	*14880	*14880	*23660	17950	*16690	9390	11440	6080			7890	4230	(25.2)
-3.0 m	kg	*10030	*10030	*10220	8260	*6910	4290	*4820	2790			*3700	2480	6.64
(-10 ft)	lb	*22110	*22110	*22530	18210	*15230	9460	*10630	6150			*8160	5470	(21.8)
-4.5 m	kg			*7420	*7420	*4910	4470							
(-15 ft)	lb			*16360	*16360	*10820	9850							

Boom: 5.1 m (16' 9") / Arm: 3.1 m (11' 1") / Bucket: 0.76 m³ (0.92 yd³) SAE heaped / Shoe: 600 mm (24") triple grouser.

Load point height m (ft)		Load radius 1.5 m (5 ft)		3.0 m (10 ft)		4.5 m (15 ft)		6.0 m (20 ft)		7.5 m (25 ft)		At max. reach Capacity		Reach
														m (ft)
7.5 m	kg											*2960	2830	6.73
(25 ft)	lb											*6530	6240	(22.1)
6.0 m	kg							*2830	*2830			*2980	2070	7.88
(20 ft)	lb							*6240	*6240			*6570	4560	(25.9)
4.5 m	kg							*3310	*3310	*2190	*2090	*3050	1710	8.57
(15 ft)	lb							*7300	*7300	*4610	*4610	*6720	3770	(28.1)
3.0m	kg					*4660	*4660	*3880	3170	*3050	2120	2880	1530	8.91
(10 ft)	lb					*10270	*10270	*8550	6990	*6720	4670	6350	3370	(29.2)
1.5 m	kg			*10170	8790	*6110	4680	*4570	2970	3760	2030	2800	1470	8.96
(5 ft)	lb			*22420	19380	*13470	10320	*10080	6550	8290	4480	6170	3240	(29.4)
Ground	kg			*8710	8190	*7170	4370	*5130	2810	3670	1940	2900	1510	8.73
Line	lb			*19200	18060	*15810	9630	*11310	6190	8090	4280	6390	3330	(28.6)
-1.5 m	kg	*6350	*6350	*10370	8040	*7530	4210	5140	2710	*3200	1900	3210	1690	8.17
(-5 ft)	lb	*14000	*14000	*22860	17730	*16600	9280	11330	5970	*7050	4190	7080	3730	(26.8)
-3.0 m	kg	*8990	*8990	*10850	8100	*7150	4200	*5070	2700			*3580	2110	7.21
(-10 ft)	lb	*19820	*19820	*23920	17860	*15760	9260	*11180	5950			*7890	4650	(23.7)
-4.5 m	kg	*12470	*12470	*8590	8330	*5740	4310					*3320	3280	5.59
(-15 ft)	lb	*27490	*27490	*18940	18360	*12650	9500					*7320	7230	(18.3)

1. Lifting capacity are based on SAE J1097 and ISO 10567.
2. Lifting capacity of the ROBEX series does not exceed 75% of tipping load with the machine on firm, level ground or 87% of full hydraulic capacity.
3. The load point is a hook located on the back of the bucket.
4. (*) indicates load limited by hydraulic capacity.

LIFTING CAPACITY

Rating over-front Rating over-side or 360 degrees

HX180 NLC 2-PIECE BOOM

2-piece boom: 5.1 m (16' 9") / Arm: 2.2 m (7' 3") / Bucket: 0.76 m³ (0.92 yd³) SAE heaped / Shoe: 600 mm (24") triple grouser.

Load point height m (ft)		Load radius										At max. reach		
		1.5 m (5 ft)		3.0 m (10 ft)		4.5 m (15 ft)		6.0 m (20 ft)		7.5 m (25 ft)		Capacity		Reach
														m (ft)
6.0 m	kg											*3680	2500	7.06
(20 ft)	lb											*8110	5510	(23.2)
4.5 m	kg							*4110	3270			*3640	2020	7.83
(15 ft)	lb							*9060	7210			*8020	4450	(25.7)
3.0m	kg					*5800	4960	*4560	3130			3350	1800	8.21
(10 ft)	lb					*12790	10930	*10050	6900			7390	3970	(26.9)
1.5 m	kg					*6940	4570	*5080	2960	*3390	2040	3270	1740	8.27
(5 ft)	lb					*15300	10080	*11200	6530	*7470	4500	7210	3840	(27.1)
Ground	kg			*6260	*6260	*7520	4350	5300	2830			3420	1820	8.01
Line	lb			*13800	*13800	*16580	9590	11730	6240			7540	4010	(26.3)
-1.5 m	kg	*6250	*6250	*10390	8200	*7360	4290	5270	2790			*3640	2090	7.39
(-5 ft)	lb	*13780	*13780	*20910	18080	*16230	9460	11620	6450			*8020	4610	(24.2)
-3.0 m	kg			*9080	8390	*6340	5010					*3240	2790	6.28
(-10 ft)	lb			*20020	18500	*13980	9610					*7140	6150	(20.6)
-4.5 m	kg			*7420	*7420	*4910	*4910							
(-15 ft)	lb			*16360	*16360	*10820	*10820							

2-piece boom: 5.1 m (16' 9") / Arm: 2.6 m (8' 6") / Bucket: 0.76 m³ (0.92 yd³) SAE heaped / Shoe: 600 mm (24") triple grouser.

Load point height m (ft)		Load radius										At max. reach		
		1.5 m (5 ft)		3.0 m (10 ft)		4.5 m (15 ft)		6.0 m (20 ft)		7.5 m (25 ft)		Capacity		Reach
														m (ft)
6.0 m	kg											*3380	2260	7.48
(20 ft)	lb											*7450	4980	(24.5)
4.5 m	kg											*3370	1840	8.20
(15 ft)	lb											*7430	4060	(26.9)
3.0m	kg							*4280	3140	*3190	2100	3110	1650	8.57
(10 ft)	lb							*9440	6920	*7030	4630	6860	3640	(28.1)
1.5 m	kg			*7050	*7050	*6590	4600	*4860	2950	3790	2020	3030	1590	8.62
(5 ft)	lb			*15540	*15540	*14530	10140	*10710	6500	8360	4450	6680	3510	(28.3)
Ground	kg			*7110	*7110	*7360	4320	*5270	2800	3720	1960	3150	1650	8.37
Line	lb			*15670	*15670	*16230	9520	*11620	6170	8200	4320	6940	3640	(27.5)
-1.5 m	kg	*6090	*6090	*10020	8070	*7410	4220	5210	2730			*3500	1870	7.78
(-5 ft)	lb	*13430	*13430	*22090	17790	*16340	9300	11490	6020			*7720	4120	(25.5)
-3.0 m	kg	*9550	*9550	*9790	8210	*6670	4260	*4630	2770			*3280	2420	6.76
(-10 ft)	lb	*21050	*21050	*21580	18100	*14700	9390	*10210	6110			*7230	5340	(22.2)
-4.5 m	kg			*6770	*6770	*4500	4470							
(-15 ft)	lb			*14930	*14930	*9920	9850							

1. Lifting capacity are based on SAE J1097 and ISO 10567.
2. Lifting capacity of the ROBEX series does not exceed 75% of tipping load with the machine on firm, level ground or 87% of full hydraulic capacity.
3. The load point is a hook located on the back of the bucket.
4. (*) indicates load limited by hydraulic capacity.

LIFTING CAPACITY

Rating over-front Rating over-side or 360 degrees

HX180 LD MONO-BOOM

Boom: 5.1 m (16' 9") / Arm: 2.2 m (7' 3") / Bucket: 0.76 m³ (0.92 yd³) SAE heaped / Shoe: 600 mm (24") triple grouser. Dozer up

Load point height m (ft)		Load radius								At max. reach		
		1.5 m (5 ft)		3.0 m (10 ft)		4.5 m (15 ft)		6.0 m (20 ft)		Capacity		Reach
												m (ft)
7.5 m	kg									*3700	*3700	5.60
(25 ft)	lb									*8160	*8160	(18.4)
6.0 m	kg									*3620	3100	6.98
(20 ft)	lb									*7980	6830	(22.9)
4.5 m	kg					*4530	*4530	*4060	3920	*3640	2520	7.76
(15 ft)	lb					*9990	*9990	*8950	8640	*8020	5560	(25.5)
3.0m	kg			*9050	*9050	*5750	*5750	*4550	3780	*3710	2270	8.15
(10 ft)	lb			*19950	*19950	*12680	*12680	*10030	8330	*8180	5000	(26.7)
1.5 m	kg					*6980	5590	*5110	3610	3760	2200	8.20
(5 ft)	lb					*15390	12320	*11270	7960	8290	4850	(26.9)
Ground	kg			*7160	*7160	*7630	5360	*5470	3490	*3890	2290	7.94
Line	lb			*15790	*15790	*16820	11820	*12060	7690	*8580	5050	(26.0)
-1.5 m	kg	*7070	*7070	*11190	10310	*7540	5300	*5410	3450	*3920	2620	7.31
(-5 ft)	lb	*15590	*15590	*24670	22730	*16620	11680	*11930	7610	*8640	5780	(24.0)
-3.0 m	kg	*11260	*11260	*9570	*9570	*6620	5360			*3710	3450	6.19
(-10 ft)	lb	*24820	*24820	*21100	*21100	*14590	11820			*8180	7610	(20.3)
-4.5 m	kg			*6220	*6220							
(-15 ft)	lb			*13710	*13710							
-4.5 m	kg	*17990	*17990	*13070	*13070					*7190	*7190	6.24
(-15 ft)	lb	*39660	*39660	*28810	*28810					*15850	*15850	(20.5)

Boom: 5.1 m (16' 9") / Arm: 2.2 m (7' 3") / Bucket: 0.76 m³ (0.92 yd³) SAE heaped / Shoe: 600 mm (24") triple grouser. Dozer down

Load point height m (ft)		Load radius								At max. reach		
		1.5 m (5 ft)		3.0 m (10 ft)		4.5 m (15 ft)		6.0 m (20 ft)		Capacity		Reach
												m (ft)
7.5 m	kg									*3700	*3700	5.60
(25 ft)	lb									*8160	*8160	(18.4)
6.0 m	kg									*3620	3260	6.98
(20 ft)	lb									*7980	7190	(22.9)
4.5 m	kg					*4530	*4530	*4070	*4070	*3650	2670	7.76
(15 ft)	lb					*9990	*9990	*8970	*8970	*8050	5890	(25.5)
3.0m	kg			*9060	*9060	*5750	*5750	*4560	3990	*3720	2400	8.15
(10 ft)	lb			*19970	*19970	*12680	*12680	*10050	8800	*8200	5290	(26.7)
1.5 m	kg					*6990	5920	*5120	3820	*3810	2330	8.20
(5 ft)	lb					*15410	13050	*11290	8420	*8400	5140	(26.9)
Ground	kg			*7160	*7160	*7640	5700	*5480	3700	*3900	2430	7.94
Line	lb			*15790	*15790	*16840	12570	*12080	8160	*8600	5360	(26.0)
-1.5 m	kg	*7070	*7070	*11190	11090	*7550	5630	*5410	3660	*3920	2770	7.31
(-5 ft)	lb	*15590	*15590	*24670	24450	*16640	12410	*11930	8070	*8640	6110	(24.0)
-3.0 m	kg	*11260	*11260	*9580	*9580	*6630	5700			*3710	3640	6.19
(-10 ft)	lb	*24820	*24820	*21120	*21120	*14620	12570			*8180	8020	(20.3)
-4.5 m	kg			*6230	*6230							
(-15 ft)	lb			*13730	*13730							

Boom: 5.1 m (16' 9") / Arm: 2.6 m (8' 6") / Bucket: 0.76 m³ (0.92 yd³) SAE heaped / Shoe: 600 mm (24") triple grouser. Dozer up

Load point height m (ft)		Load radius										At max. reach		
		1.5 m (5 ft)		3.0 m (10 ft)		4.5 m (15 ft)		6.0 m (20 ft)		7.5 m (25 ft)		Capacity		Reach
														m (ft)
7.5 m	kg											*3340	*3340	6.11
(25 ft)	lb											*7360	*7360	(20.0)
6.0 m	kg							*2990	*2990			*3310	2820	7.37
(20 ft)	lb							*6590	*6590			*7300	6220	(24.2)
4.5 m	kg							*3720	*3720			*3370	2330	8.11
(15 ft)	lb							*8200	*8200			*7430	5140	(26.6)
3.0m	kg			*7870	*7870	*5270	*5270	*4260	3790	*2780	2590	*3460	2100	8.48
(10 ft)	lb			*17350	*17350	*11620	*11620	*9390	8360	*6130	5710	*7630	4630	(27.8)
1.5 m	kg			*8160	*8160	*6610	5610	*4880	3600	*3610	2510	3510	2030	8.53
(5 ft)	lb			*17990	*17990	*14570	12370	*10760	7940	*7960	5530	7740	4480	(28.0)
Ground	kg			*7950	*7950	*7450	5340	*5340	3460	*3430	2440	3640	2100	8.28
Line	lb			*17530	*17530	*16420	11770	*11770	7630	*7560	5380	8020	4630	(27.2)
-1.5 m	kg	*6750	*6750	*10730	10190	*7570	5230	*5420	3390			*3760	2370	7.69
(-5 ft)	lb	*14880	*14880	*23660	22470	*16690	11530	*11950	7470			*8290	5220	(25.2)
-3.0 m	kg	*10030	*10030	*10220	*10220	*6910	5260	*4820	3420			*3700	3020	6.64
(-10 ft)	lb	*22110	*22110	*22530	*22530	*15230	11600	*10630	7540			*8160	6660	(21.8)
-4.5 m	kg			*7420	*7420	*4910	*4910							
(-15 ft)	lb			*16360	*16360	*10820	*10820							

LIFTING CAPACITY

Rating over-front Rating over-side or 360 degrees

HX180 LD MONO-BOOM

Boom: 5.1 m (16' 9") / Arm: 2.6 m (8' 6") / Bucket: 0.76 m³ (0.92 yd³) SAE heaped / Shoe: 600 mm (24") triple grouser. Dozer down

Load point height m (ft)		Load radius 1.5 m (5 ft)		3.0 m (10 ft)		4.5 m (15 ft)		6.0 m (20 ft)		7.5 m (25 ft)		At max. reach Capacity		Reach
														m (ft)
7.5 m	kg											*3340	*3340	6.11
(25 ft)	lb											*7360	*7360	(20.0)
6.0 m	kg							*2990	*2990			*3310	2970	7.37
(20 ft)	lb							*6590	*6590			*7300	6550	(24.2)
4.5 m	kg							*3720	*3720			*3300	2460	8.11
(15 ft)	lb							*8200	*8200			*7430	5420	(26.6)
3.0m	kg			*7870	*7870	*5270	*5270	*4260	3990	*2780	2730	*3460	2220	8.48
(10 ft)	lb			*17350	*17350	*11620	*11620	*9390	8800	*6130	6020	*7630	4890	(27.8)
1.5 m	kg			*8160	*8160	*6610	5950	*4880	3810	*3610	2660	*.3560	2150	8.53
(5 ft)	lb			*17990	*17990	*14570	13120	*10760	8400	*7960	5860	*7850	4740	(28.0)
Ground	kg			*7950	*7950	*7450	5670	*5340	3670	*3430	2590	*3680	2230	8.28
Line	lb			*17530	*17530	*16420	12500	*11770	8090	*7560	5710	*8110	4920	(27.2)
-1.5 m	kg	*6750	*6750	*10730	*10730	*7570	5560	*5420	3590			*3760	2510	7.69
(-5 ft)	lb	*14880	*14880	*23660	*23660	*16690	12260	*11950	7910			*8290	5530	(25.2)
-3.0 m	kg	*10030	*10030	*10220	*10220	*6910	5590	*4820	3620			*3700	3200	6.64
(-10 ft)	lb	*22110	*22110	*22530	*22530	*15230	12320	*10630	7980			*8160	7050	(21.8)
-4.5 m	kg			*7420	*7420	*4910	*4910							
(-15 ft)	lb			*16360	*16360	*10820	*10820							

Boom: 5.1 m (16' 9") / Arm: 3.1 m (11' 1") / Bucket: 0.76 m³ (0.92 yd³) SAE heaped / Shoe: 600 mm (24") triple grouser. Dozer up

Load point height m (ft)		Load radius 1.5 m (5 ft)		3.0 m (10 ft)		4.5 m (15 ft)		6.0 m (20 ft)		7.5 m (25 ft)		At max. reach Capacity		Reach
														m (ft)
7.5 m	kg											*2960	*2960	6.73
(25 ft)	lb											*6530	*6530	(22.1)
6.0 m	kg							*2830	*2830			*2980	2510	7.88
(20 ft)	lb							*6240	*6240			*6570	5530	(25.9)
4.5 m	kg							*3310	*3310	*2090	*2090	*3050	2100	8.57
(15 ft)	lb							*7300	*7300	*4610	*4610	*6720	4630	(28.1)
3.0m	kg					*4660	*4660	*3880	3810	*3050	2590	*3150	1900	8.91
(10 ft)	lb					*10270	*10270	*8550	8400	*6720	5710	*6940	4190	(29.2)
1.5 m	kg			*10170	*10170	*6110	5670	*4570	3610	*3800	2490	3220	1830	8.96
(5 ft)	lb			*22420	*22420	*13470	12500	*10080	7960	*8380	5490	7100	4030	(29.4)
Ground	kg			*8710	*8710	*7170	5340	*5130	3440	*4050	2410	3320	1890	8.73
Line	lb			*19200	*19200	*15810	11770	*11310	7580	*8930	5310	7320	4170	(28.6)
-1.5 m	kg	*6350	*6350	*10370	10100	*7530	5180	*5370	3340	*3200	2360	*3530	2100	8.17
(-5 ft)	lb	*14000	*14000	*22860	22270	*16600	11420	*11840	7360	*7050	5200	*7780	4630	(26.8)
-3.0 m	kg	*8990	*8990	*10850	10160	*7150	5170	*5070	3330			*3580	2600	7.21
(-10 ft)	lb	*19820	*19820	*23920	22400	*15760	11400	*11180	7340			*7890	5730	(23.7)
-4.5 m	kg	*12470	*12470	*8590	*8590	*5740	5290					*3320	*3320	5.59
(-15 ft)	lb	*27490	*27490	*18940	*18940	*12650	11660					*7320	*7320	(18.3)

Boom: 5.1 m (16' 9") / Arm: 3.1 m (11' 1") / Bucket: 0.76 m³ (0.92 yd³) SAE heaped / Shoe: 600 mm (24") triple grouser. Dozer down

Load point height m (ft)		Load radius 1.5 m (5 ft)		3.0 m (10 ft)		4.5 m (15 ft)		6.0 m (20 ft)		7.5 m (25 ft)		At max. reach Capacity		Reach
														m (ft)
7.5 m	kg											*2960	*2960	6.73
(25 ft)	lb											*6530	*6530	(22.1)
6.0 m	kg							2830	*2830			*2980	2650	7.88
(20 ft)	lb							*6240	*6240			*6570	5840	(25.9)
4.5 m	kg							*3310	*3310	*2090	*2090	*3050	2220	8.57
(15 ft)	lb							*7300	*7300	*4610	*4610	*6720	4890	(28.1)
3.0m	kg					*4660	*4660	*3880	*3880	*3050	2730	*3150	2020	8.91
(10 ft)	lb					*10270	*10270	*8550	*8550	*6720	6020	*6940	4450	(29.2)
1.5 m	kg			*10170	*10170	*6110	6010	*4570	3810	*3800	2640	*3270	1950	8.96
(5 ft)	lb			*22420	*22420	*13470	13250	*10080	8400	*8380	5820	*7210	4300	(29.4)
Ground	kg			*8710	*8710	*7170	5670	*5130	3640	*4050	2550	*3410	2010	8.73
Line	lb			*19200	*19200	*15810	12500	*11310	8020	*8930	5620	*7520	4430	(28.6)
-1.5 m	kg	*6350	*6350	*10370	*10370	*7530	5510	*5370	3540	*3200	2510	*3530	2230	8.17
(-5 ft)	lb	*14000	*14000	*22860	*22860	*16600	12150	*11840	7800	*7050	5530	*7780	4920	(26.8)
-3.0 m	kg	*8990	*8990	*10850	*10850	*7150	5500	*5070	3530			*3580	2750	7.21
(-10 ft)	lb	*19820	*19820	*23920	*23920	*15760	12130	*11180	7780			*7890	6060	(23.7)
-4.5 m	kg	*12470	*12470	*8590	*8590	*5740	5620					*3320	*3320	5.59
(-15 ft)	lb	*27490	*27490	*18940	*18940	*12650	12390					*7320	*7320	(18.3)

1. Lifting capacity are based on SAE J1097 and ISO 10567.
2. Lifting capacity of the ROBEX series does not exceed 75% of tipping load with the machine on firm, level ground or 87% of full hydraulic capacity.
3. The load point is a hook located on the back of the bucket.
4. (*) indicates load limited by hydraulic capacity.

LIFTING CAPACITY

Rating over-front Rating over-side or 360 degrees

HX180 ND 2-PIECE BOOM

Boom: 5.1 m (16' 9") / Arm: 2.2 m (7' 3") / Bucket: 0.76 m³ (0.92 yd³) SAE heaped / Shoe: 600 mm (24") triple grouser. Dozer up

Load point height m (ft)		Load radius										At max. reach		
		1.5 m (5 ft)		3.0 m (10 ft)		4.5 m (15 ft)		6.0 m (20 ft)		7.5 m (25 ft)		Capacity		Reach
														m (ft)
6.0 m	kg											*3680	3020	7.06
(20 ft)	lb											*8110	6660	(23.2)
4.5 m	kg							*4110	3920			*3640	2460	7.83
(15 ft)	lb							*9060	8640			*8020	5420	(25.5)
3.0m	kg					*5800	*5800	*4560	3770			*3660	2220	8.21
(10 ft)	lb					*12790	*12790	*10050	8310			*8070	4890	(26.9)
1.5 m	kg					*6940	5570	*5080	3600	*3390	2510	*3700	2150	8.27
(5 ft)	lb					*15300	12280	*11200	7940	*7470	5530	*8160	4740	(27.1)
Ground	kg			*6260	*6260	*7520	5330	*5390	3470			*3720	2250	8.01
Line	lb			*13800	*13800	*16580	11750	*11880	7650			*8200	4960	(26.3)
-1.5 m	kg	*6250	*6250	*10390	10280	*7360	5270	*5270	3430			*3640	2570	7.39
(-5 ft)	lb	*13780	*13780	*22910	22660	*16230	11620	*11620	7560			*8020	5670	(24.2)
-3.0 m	kg			*9080	*9080	*6340	5350					*3240	*3240	6.28
(-10 ft)	lb			*20020	*20020	*13980	11790					*7140	*7140	(20.6)

Boom: 5.1 m (16' 9") / Arm: 2.2 m (7' 3") / Bucket: 0.76 m³ (0.92 yd³) SAE heaped / Shoe: 600 mm (24") triple grouser. Dozer down

Load point height m (ft)		Load radius										At max. reach		
		1.5 m (5 ft)		3.0 m (10 ft)		4.5 m (15 ft)		6.0 m (20 ft)		7.5 m (25 ft)		Capacity		Reach
														m (ft)
6.0 m	kg											*3680	3190	7.06
(20 ft)	lb											*8110	7030	(23.2)
4.5 m	kg							*4110	*4110			*3640	2610	7.83
(15 ft)	lb							*9060	*9060			*8020	5750	(25.7)
3.0m	kg					*5800	*5800	*4560	3990			*3660	2350	8.21
(10 ft)	lb					*12790	*12790	*10050	8800			*8070	5180	(26.9)
1.5 m	kg					*6940	5910	*5080	3810	*3390	2660	*3700	2280	8.27
(5 ft)	lb					*15300	13030	*11200	8400	*7470	5860	*8160	5030	(27.1)
Ground	kg			*6260	*6260	*7520	5670	*5390	3680			*3720	2390	8.01
Line	lb			*13800	*13800	*16580	12500	*11880	8110			*8200	5270	(26.3)
-1.5 m	kg	*6250	*6250	*10390	*10390	*7360	5610	*5270	3640			*3640	2730	7.39
(-5 ft)	lb	*13780	*13780	*22910	*22910	*16230	12370	*11620	8020			*8020	6020	(24.2)
-3.0 m	kg			*9080	*9080	*6340	5690					*3240	*3240	6.28
(-10 ft)	lb			*20020	*20020	*13980	12540					*7140	*7140	(20.6)
-4.5 m	kg			*6770	*6770	*4500	4470							
(-15 ft)	lb			*14930	*14930	*9920	9850							

1. Lifting capacity are based on SAE J1097 and ISO 10567.
2. Lifting capacity of the ROBEX series does not exceed 75% of tipping load with the machine on firm, level ground or 87% of full hydraulic capacity.
3. The load point is a hook located on the back of the bucket.
4. (*) indicates load limited by hydraulic capacity.

LIFTING CAPACITY

Rating over-front Rating over-side or 360 degrees

HX180 NLC 2-PIECE BOOM

Boom: 5.1 m (16' 9") / Arm: 2.6 m (8' 6") / Bucket: 0.76 m³ (0.92 yd³) SAE heaped / Shoe: 600 mm (24") triple grouser. Dozer up

Load point height m (ft)		Load radius										At max. reach		
		1.5 m (5 ft)		3.0 m (10 ft)		4.5 m (15 ft)		6.0 m (20 ft)		7.5 m (25 ft)		Capacity		Reach
														m (ft)
6.0 m	kg											*3380	2740	7.48
(20 ft)	lb											*7450	6040	(24.5)
4.5 m	kg											*3370	2270	8.20
(15 ft)	lb											*7430	5000	(26.9)
3.0m	kg							*4280	3790	*3190	2570	*3410	2040	8.57
(10 ft)	lb							*9440	8360	*7030	5670	*7520	450	(28.1)
1.5 m	kg			*7050	*7050	*6590	5600	*4860	3590	*3980	2490	3460	1980	8.62
(5 ft)	lb			*15540	*15540	*14530	12350	*10710	7910	*8770	5490	7630	4370	(28.3)
Ground	kg			*7110	*7110	*7360	5310	*5270	3440	*3980	2430	*3510	2060	8.37
Line	lb			*15670	*15670	*16230	11710	*11620	7580	*8770	5360	*7740	4540	(27.5)
-1.5 m	kg	*6090	*6090	*10020	*10020	*7410	5200	*5300	3370			*3500	2320	7.78
(-5 ft)	lb	*13430	*13430	*22090	*22090	*16340	11460	*11680	7530			*7720	5110	(25.5)
-3.0 m	kg	*9550	*9550	*9790	*9790	*6670	5240	*4630	3410			*3280	2960	6.76
(-10 ft)	lb	*21050	*21050	*21580	*21580	*14700	11550	*10210	7520			*7230	6530	(22.2)
-4.5 m	kg			*6770	*6770	*4500	*4500							
(-15 ft)	lb			*14930	*14930	*9920	*9920							

Boom: 5.1 m (16' 9") / Arm: 2.6 m (8' 6") / Bucket: 0.76 m³ (0.92 yd³) SAE heaped / Shoe: 600 mm (24") triple grouser. Dozer down

Load point height m (ft)		Load radius										At max. reach		
		1.5 m (5 ft)		3.0 m (10 ft)		4.5 m (15 ft)		6.0 m (20 ft)		7.5 m (25 ft)		Capacity		Reach
														m (ft)
6.0 m	kg											*3380	2890	7.48
(20 ft)	lb											*7450	6370	(24.5)
4.5 m	kg											*3370	2400	8.20
(15 ft)	lb											*7430	5290	(26.9)
3.0m	kg							*4280	4000	*3190	2730	*3410	2170	8.57
(10 ft)	lb							*9440	8820	*7030	6020	*7520	4780	(28.1)
1.5 m	kg			*7050	*7050	*6590	5940	*4860	3800	*3980	2640	*3470	2100	8.62
(5 ft)	lb			*15540	*15540	*14530	13100	*10710	8380	*8770	5820	*7650	4630	(28.3)
Ground	kg			*7110	*7110	*7360	5650	*5270	3650	*3980	2580	*3510	2190	8.37
Line	lb			*15670	*15670	*16230	12460	*11620	8050	*8770	5690	*7740	4830	(27.5)
-1.5 m	kg	*6090	*6090	*10020	*10020	*7410	5540	*5300	3580			*3500	2460	7.78
(-5 ft)	lb	*13430	*13430	*22090	*22090	*16340	12210	*11680	7890			*7720	5420	(25.5)
-3.0 m	kg	*9550	*9550	*9790	*9790	*6670	5580	*4630	3620			*3280	3130	6.76
(-10 ft)	lb	*21050	*21050	*21580	*21580	*14700	12300	*10210	7980			*7230	6900	(22.2)
-4.5 m	kg			*6770	*6770	*4500	*4500							
(-15 ft)	lb			*14930	*14930	*9920	*9920							

1. Lifting capacity are based on SAE J1097 and ISO 10567.
2. Lifting capacity of the ROBEX series does not exceed 75% of tipping load with the machine on firm, level ground or 87% of full hydraulic capacity.
3. The load point is a hook located on the back of the bucket.
4. (*) indicates load limited by hydraulic capacity.

ENGINE	STD	OPT
Perkins 1204F Engine	●	
HYDRAULIC SYSTEM		
Intelligent Power Control (IPC)		
3-power mode, 2-work mode, user mode	●	
Variable Power Control	●	
Pump Flow Control	●	
Attachment Mode Flow Control		●
Engine Auto Idle	●	
Engine Auto Shutdown Control	●	
Electronic Fan Control	●	
CABIN & INTERIOR		
ISO Standard cabin		
Rise-up type windshield wiper	●	
Radio / USB player	●	
Handsfree mobile phone system with USB	●	
12 volt power outlet (24V DC to 12V DC converter)	●	
Electric horn	●	
All-weather steel cab with 360° visibility	●	
Safety glass windows	●	
Sliding fold-in front window	●	
Sliding side window (LH)	●	
Lockable door	●	
Hot & cool box	●	
Storage compartment & Ashtray	●	
Transparent cabin roof-cover	●	
Sun visor	●	
Door and cab locks, one key	●	
Mechanical suspension seat with heater	●	
Pilot-operated slidable joystick	●	
Console box height adjust system	●	
Automatic climate control		
Air conditioner & heater	●	
Defroster	●	
Starting Aid (air grid heater) for cold weather	●	
Centralized monitoring		
8" LCD display	●	
Engine speed or Trip meter/Accel.	●	
Engine coolant temperature gauge	●	
Max power	●	
Low speed/High speed	●	
Auto idle	●	
Overload	●	
Check Engine	●	
Air cleaner clogging	●	
Indicators	●	
ECO Gauges	●	
Fuel level gauge	●	
Hyd. oil temperature gauge	●	
Fuel warmer	●	
Warnings	●	
Communication error	●	
Low battery	●	
Clock	●	
Cabin lights		●
Cabin front window rain guard	●	
Cabin roof-steel cover		●
Seat		
Adjustable air suspension seat with heater		●
Cabin FOPS/FOG (ISO/DIS 10262) Level 2		
FOPS (Falling Object Protective Structure) · ISO 3449 Level 2		●
FOG (Falling Object Guard)		●
Cabin ROPS (ISO 12117-2)		
ROPS (Roll Over Protective Structure)	●	

SAFETY	STD	OPT
Battery master switch	●	
Rearview camera	●	
AAVM (Advanced Around View Monitoring)		●
Four front working lights	●	
Travel alarm	●	
Rear work lamp		●
Beacon lamp		●
Automatic swing brake	●	
Boom holding system	●	
Arm holding system	●	
Safety lock valve for boom cylinder with overload warning device	●	
Safety lock valve for arm cylinder		●
Swing Lock System		●
Three outside rearview mirrors	●	
OTHER		
Booms		
5.1 m; 16' 9"	●	
5.1 m; 16' 9" 2-piece boom		●
Arms		
2.2 m; 7' 3"		●
2.6 m; 8' 6"	●	
3.1 m; 10' 2"		●
Removable clean-out dust net for cooler	●	
Removable reservoir tank	●	
Fuel pre-filter	●	
Self-diagnostics system	●	
Hi-mate (Remote Management System)	●	
Batteries (2 × 12 V × 100 Ah)	●	
Fuel filler pump (50 ℓ/min)		●
Single-acting piping kit (breaker, etc.)		●
Double-acting piping kit (clamshell, etc.)	●	
Rotating Piping Kit		●
Quick coupler piping		●
Quick coupler		●
Boom floating control		●
Accumulator for lowering work equipment	●	
Pattern change valve (2 patterns)		●
Fine Swing Control System		●
Tool kit		●
UNDERCARRIAGE		
Lower frame under cover (Additional)		●
Lower frame under cover (Normal)	●	
Buldozerinis peilis		●
Track shoes		
Triple grouser shoes (500 mm; 20")		●
Triple grouser shoes (600 mm; 24")	●	
Triple grouser shoes (700 mm; 28")		●
Triple grouser shoes (800 mm; 32")		●
Track rail guard	●	

STD = Standard
OPT = Optional

* Standard and optional equipment may vary. Contact your Hyundai dealer for more information. The machine may vary according to International standards.
* The photos may include attachments and optional equipment that are not available in your area.
* Materials and specifications are subject to change without advance notice.
* All imperial measurements rounded off to the nearest pound or inch.

HYUNDAI HEAVY INDUSTRIES EUROPE | CONSTRUCTION EQUIPMENT

PLEASE CONTACT

Hyundai Heavy Industries Europe N.V.
VOSSENDAAL 11, 2440 GEEL, BELGIUM **TEL:** (32) 14-56-2200 FAX: (32) 14-59-3405